ITEM	147-DH-109
SERVICE	DRAIN DRUM HEATER
DUTY	25 KW

ITEM	147-D-109
SERVICE	TANK AREA DRAIN DRUM
ID x TL. TL	3000 mm x 7000 mm
DESIGN PRESS.	3.5 barg
DESIGN TEMP.	Min: -44°C/Max: 85°C
INSULATION	N

ITEM	147-P-108
SERVICE	TANK AREA DRAIN DRUM PUMP
TYPE	SUMP PUMP
CAPACITY	15.5 m³/h
DIFF. PRESS.	6.06 bar
ABSORBED POWER	5.9 KW

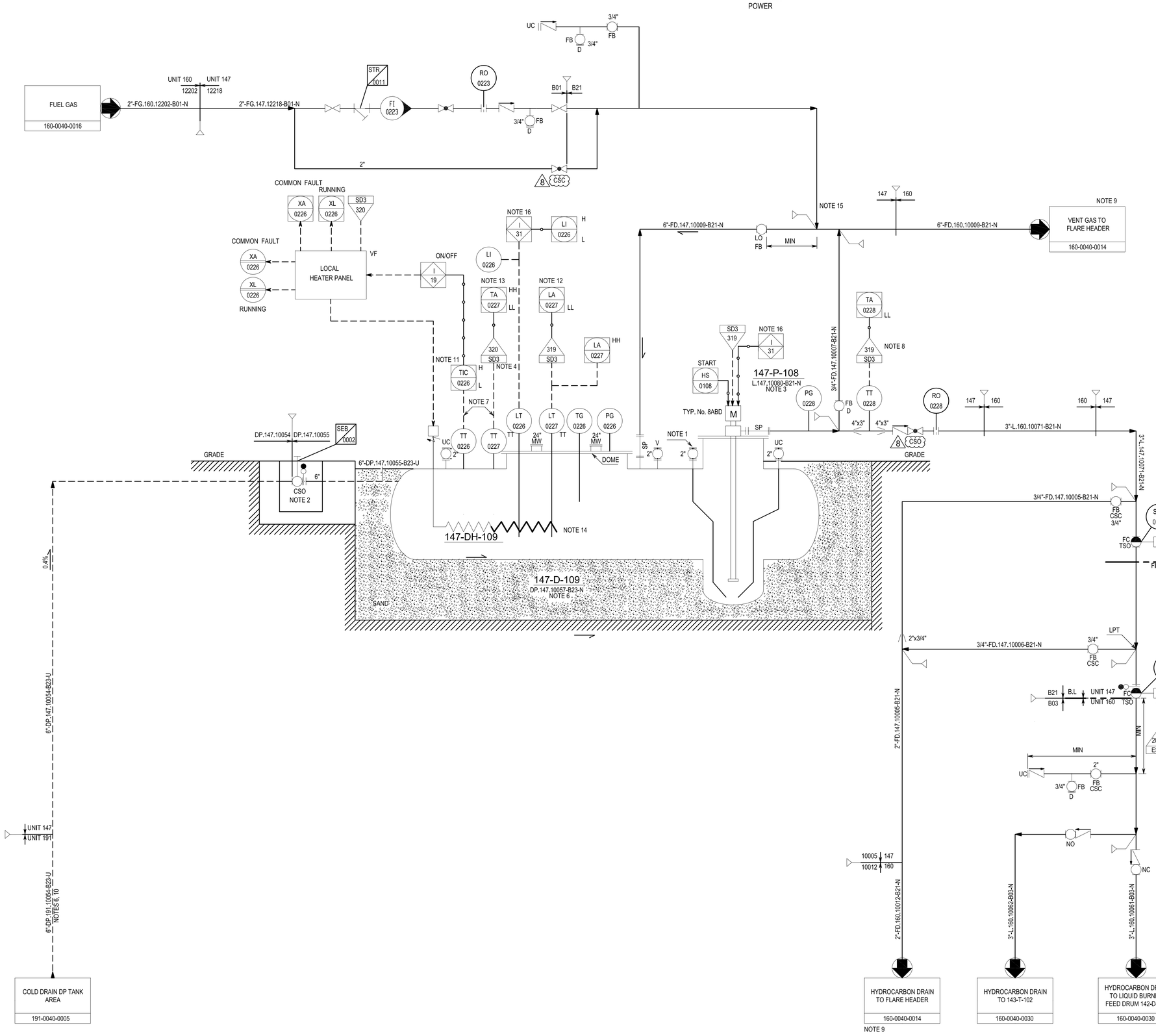

NOTES

1. ONE UC IS USED TO FLUIDISE THE BOTTOM WHILE THE OTHER IS USED FOR EMPTYING BY MOBILE SYSTEM.
2. VALVE PIT. VALVE TO BE FITTED WITH EXTENDED SPINDLE FOR ACCESSIBILITY.
3. PUMP IS OPERATED MANUALLY BY OPERATOR.
4. PERMISSIVE REQUIRED TO START 147-P-108 TO PREVENT CRYOGENIC LIQUID BEING PUMPED.
5. DISTANCE BETWEEN ESDV AND HAZARDOUS EQUIPMENT IN THE FIRE ZONE SHOULD CONFORM TO THE RESULTS OF THE CONSEQUENCE ANALYSIS (REF DOC. NC-1718-999-1900-0001). IF NOT PRACTICABLE, THE MINIMUM DISTANCE SHALL BE 15 M FROM UNIT EDGE AND THE ESDV AND ASSOCIATED PIPING SHALL BE PROTECTED.
6. VESSEL RECEIVES DRAINS FROM EQUIPMENT AND PIPING IN TANK AREA.
7. THERMOCOUPLES CONNECTIONS SHOULD BE REALIZED ON THE VESSEL DOME.
8. PUMP TO BE MECHANICALLY SUITABLE FOR CRYOGENIC TEMPERATURES -46 °C DESIGN TEMP. TA0228LL STOPS DRAIN PUMP.
9. CONNECTED EITHER TO PHASE 17 OR 18.
10. DELETED.
11. TT0226H STOPS DRAIN DRUM HEATER. TT0226L STARTS DRAIN DRUM HEATER.
12. LA0227LL STOPS DRAIN PUMP.
13. 'LL' IS AN ALARM FUNCTION ONLY AND DOES NOT INITIATE A TRIP ACTION.
14. HEATER WITHDRAWAL TO BE CONSIDERED IN PIT DESIGN.
15. TOP OR SIDE CONNECTION.
16. PUMP WILL BE STOPPED AUTOMATICALLY BY LLA-0221.

GENERAL NOTES

ALL INSTRUMENT TAGS TO READ:

	LETTERS	NUMBER
1471	FFF	NNNN

FOR CONSTRUCTION

EQUIPMENT LIST

DRUM	PUMP		
	147-P-108		

UTILITY PID NUMBER

REV.	DATE	DESCRIPTION	ORIG.	PREP.	CHKD.	APPD.	AUTH.
7	20.OCT.2013	APPROVED FOR CONSTRUCTION	IDRO	MS	GS	GS	MD
6	25.SEP.2013	APPROVED FOR CONSTRUCTION	IDRO	MS	GS	GS	MD
5	07.DEC.2010	ISSUED FOR APPROVAL	IDRO	NA	NS	MF	AKH
4	10.JAN.2010	ISSUED FOR APPROVAL	IDRO	AD	AD	MF	AKH
3	15.DEC.2008	ISSUED FOR COMMENT	IDRO	NB	NZ	MF	AKH
2	01/02/08	APPROVED FOR DESIGN	WP	RI	AF	RPW	MS
1	26/10/07	ISSUED FOR HAZOP	WP	RI	AB	RPW	MS
0	08/08/07	ISSUED FOR COMPANY APPROVAL	WP	RI	AF	RPW	MS

SOUTH PARS GAS FIELD DEVELOPMENT–
PHASES 17 & 18, ASSALUYEH–IRAN
ONSHORE FACILITIES

N I O C
PARS OIL AND GAS COMPANY

PROJECT No.: POGC–84–801–244 | DOC. CLASS. 1 | SCALE : N/A

WorleyParsons | IDRO | OIEC | I S E C

TITLE: UNIT 147:PROPANE STORAGE AND EXPORT
HC DRUM SUMP–TANK AREA
PIPING AND INSTRUMENT DIAGRAM

DWG No. PID–1718–147–0030–0118 | SHEET No. 1 OF 1 | REV. 7

SIZE: A1

THIS DOCUMENT, THE DATA CONTAINED THEREIN AND ANY ATTACHMENTS PROPERTY OF NIOC