ITEM	147-A-101
SERVICE	REFRIGERANT CONDENSER
TYPE	INDUCED
DUTY/SURFACE	17.1X1.2 MW/ 5893.1 m^2
DESIGN PRESS	28 barg
DESIGN TEMP.	Min: -44 °C/Max: 105 °C
INSTALLED POWER	37 kW x 14

ITEM	147-D-104
SERVICE	REFRIGERANT SURGE DRUM
ID X TL TL	2700 mm x 10600 mm
DESIGN PRESS.	28 barg
DESIGN TEMP.	Min: -44 °C/Max: 85 °C
INSULATION	N

1471PV0202B

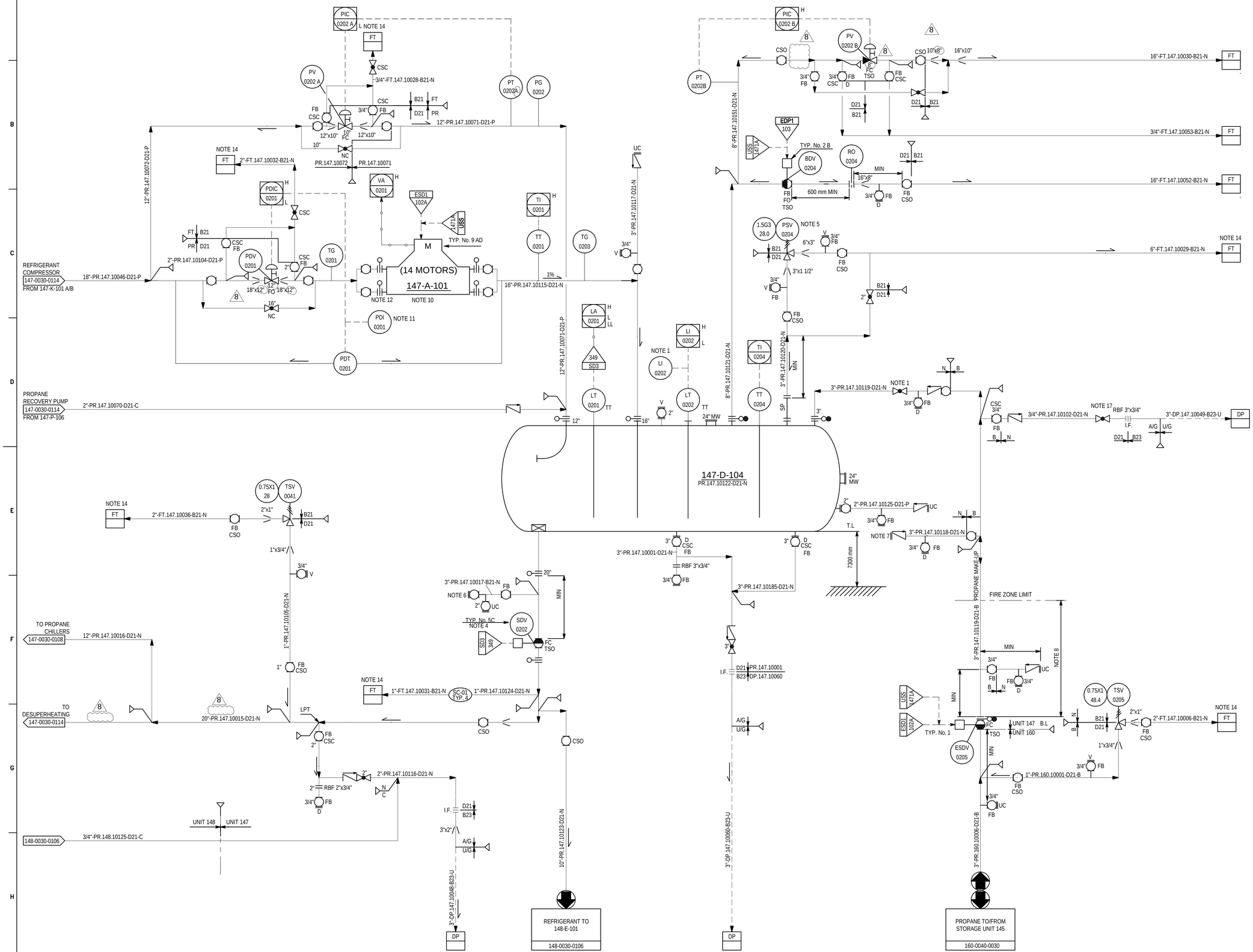

NOTES

1. LOCAL LI-0202 TO BE READABLE FROM GLOBE VALVE.
2. DELETED.
3. DELETED.
4. SDV-0202 TO BE INSTALLED AT MINIMUM DISTANCE FROM 147-D-104.
5. SPARE RELIEF VALVE STORED IN WAREHOUSE.
6. CONNECTION FOR 145-P-102 SUCTION.SHALL BE AT LOW POINT.
7. CONNECTION FOR 145-P-102 DISCHARGE. CONNECTION SHALL BE LOCATED SUCH THAT DISTANCE FROM SUCTION CONNECTION (REF. NOTE 6) IS MINIMUM.
8. DISTANCE BETWEEN ESDV AND HAZARDOUS EQUIPMENT IN THE FIRE ZONE SHOULD CONFORM TO THE RESULTS OF THE CONSEQUENCE ANALYSIS (REF DOC. NC-1718-999-1900-0001). IF NOT PRACTICABLE, THE MINIMUM DISTANCE SHALL BE 15 M FROM UNIT EDGE AND THE ESDV ASSOCIATED PIPING SHALL BE PROTECTED.
9. DELETED.
10. INDIVIDUAL FIN FAN MOTOR CONTROL.
11. TO BE VISIBLE AT GROUND.
12. HEADER DESIGN TO ALLOW ISOLATION OF 50% OF BAYS.
13. DELETED.
14. CONNECTED TO UNIT 147 AND 148 MP FLARE HEADER.
15. DELETED.
16. DELETED. 8
17. MIN. DISTANCE BETWEEN BLOCK VALVE AND GLOBE VALVE SHALL BE 600mm.

GENERAL NOTES

ALL INSTRUMENT TAGS TO READ:

	LETTERS	NUMBER
1471	FFF	NNNN

FOR CONSTRUCTION

EQUIPMENT LIST

AIR COOLER	DRUM		
147-A-101	147-D-104		

UTILITY PID NUMBER

DP	PID-1718-191-0040-0005
FT	PID-1718-191-0040-0004 (SHEET 1 OF 2)

REV.	DATE	DESCRIPTION	ORIG.	PREP.	CHKD.	APPD.	AUTH.
8	03.SEP.2014	APPROVED FOR CONSTRUCTION	IDRO	RT	GS	GS	MD
7	25.SEP.2013	APPROVED FOR CONSTRUCTION	IDRO	MS	GS	GS	MD
6	11.JUN.2013	APPROVED FOR CONSTRUCTION	IDRO	RS	NS	MF	MD
5	07.DEC.2010	ISSUED FOR APPROVAL	IDRO	NA	NS	MF	AKH
4	10.JAN.2010	ISSUED FOR APPROVAL	IDRO	AD	AD	MF	AKH
3	15.DEC.2008	ISSUED FOR COMMENT	IDRO	NB	NZ	MF	AKH
2	01/02/08	APPROVED FOR DESIGN	WP	RI	AF	RPW	MS
1	26/10/07	ISSUED FOR HAZOP	WP	RI	AB	RPW	MS
0	30/08/07	ISSUED FOR COMPANY APPROVAL	WP	RI	AF	RPW	MS

SOUTH PARS GAS FIELD DEVELOPMENT–
PHASES 17 & 18, ASSALUYEH–IRAN
ONSHORE FACILITIES

NIOC PARS OIL AND GAS COMPANY

PROJECT No.: POGC–84–801–244 | DOC. CLASS. 1 | SCALE : N/A

Worley Parsons | IDRO | OIEC | IOEC

TITLE: UNIT 147:PROPANE STORAGE AND EXPORT
REFRIGERANT CONDENSER AND SURGE DRUM
PIPING AND INSTRUMENT DIAGRAM

DWG No. PID–1718–147–0030–0113 | SHEET No. 1 OF 1 | REV. 8 | SIZE: A1

THIS DRAWING IS THE PROPERTY OF SOUTH PARS GAS FIELD DEVELOPMENT PHASES 17 & 18 PROJECT. DO NOT REPRODUCE WITHOUT WRITTEN PERMISSION.