ITEM	115-F-203 A/B
SERVICE	C4 MOLECULAR SIEVES GUARD FILTERS
DESIGN PRESS	24.0 bar g
DESIGN TEMP	85°C

ITEM	115-P-207 (2x100%)
SERVICE	C4 OFF-SPEC PUMP
TYPE	CENTRIFUGAL
CAPACITY	47.7 m3/h
DIFF PRESS	35.3 bar
ABSORBED POWER	90.4 kW

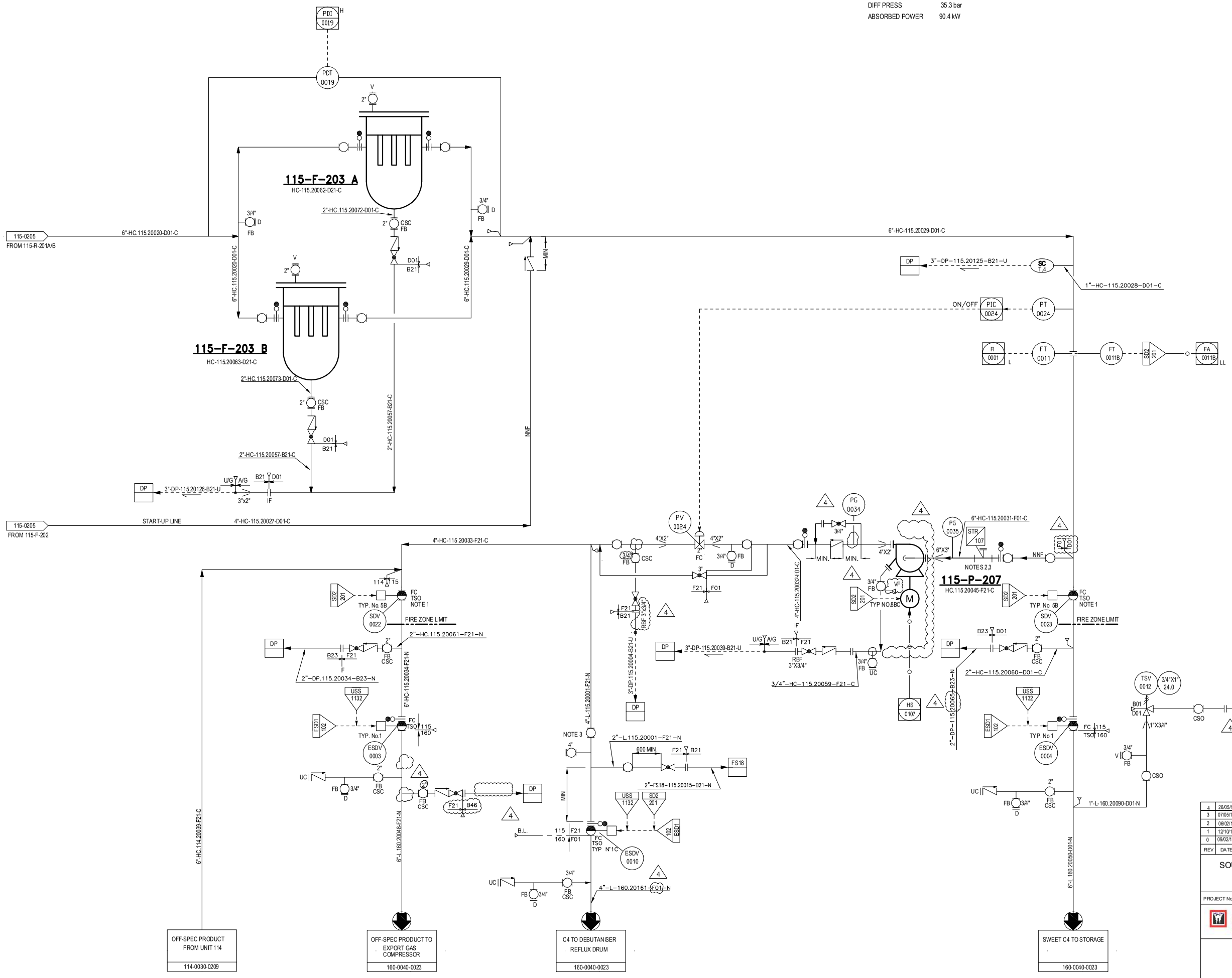

NOTES

1 - FIRE RESISTANT VALVE (ALL INSTRUMENTS, BOX PROTECTION, TUBING, CABLES, ETC., WILL BE SELECTED AND CLASSIFIED ACCORDING TO THIS PROTECTION).
2 - FOR FILTER ARRANGMENT REFER TO TABLE "A" ON PID-1718-999-0030-0006.
3- SUCTION AND DISCHARGE CONNECTIONS ARE FOR STATR-UP.

GENERAL NOTES

ALL INSTRUMENT TAGS TO READ:
LETTERS NUMBER
1152 FFFF NNNN

HOLDS

1- DELETED.
2- DELETED.

THIS P&ID IS BASED ON DRAWING NO. 115-5PD-6/8 SUPPLIED BY AXENS.

EQUIPMENT LIST

FILTER	PUMP		
115-F-203A/B	115-P-207		

UTILITY PID NUMBER

DP	PID-1718-186-0040-0205
FS18	PID-1718-186-0040-0204

REV	DATE	DESCRIPTION	ORIGI	PRPD	CH'D	APP'D	AUTH'D
4	26/05/13	APPROVED FOR CONSTRUCTION	OIEC	SD	SM	SM	RM
3	07/05/12	APPROVED FOR CONSTRUCTION	OIEC	SM	MHM	SM	RM
2	06/02/11	APPROVED FOR CONTRUCTION	OIEC	SM	MA	MMF	AAP
1	12/10/10	APPROVED FOR CONTRUCTION	OIEC	SM	MA	MMF	AAP
0	09/02/10	ISSUED FOR COMMENT	OIEC	SM	MA	MMF	AAP

SOUTH PARS GAS FIELD DEVELOPMENT PHASES 17&18
ASSALUYEH-IRAN
ONSHORE FACILITIES

POGC

PROJECT No: POGC-84-801-244 | DOC. CLASS 1 | SCALE: N/A

WorleyParsons | IDRO | OIEC | IOEC

UNIT 115: BUTANE TREATMENT AND DRYING
C4 PRODUCT EXPORT SECTION
PIPING AND INSTRUMENT DIA/GRAM

DRAWING No. PID-1718-115-0030-0206 | REVISION 4

THIS DOCUMENT IS THE SOLE PROPERTY OF N.I.O.C. ALL INFORMATION CONTAINED HEREIN MAY NEITHER BE REPRODUCED USED, DISCLOSED, TRANSMITTED OR IN ANY WAY MADE PUBLIC WITHOUT THE WRITTEN PERMISSION OF THE OWNER