ITEM	115-D-102
SERVICE	ADSORBERS DRAINING/FILLING DRUM
IDxTL-TL	2300mm x 6850mm
DESIGN PRESS	12.6/F.V. barg
DESIGN TEMP	85°C
INSULATION	YES

ITEM	115-A-101
SERVICE	REGENERATION GAS CONDENSER
DUTY/SURFACE	0.334 MW/23 m^2
DESIGN PRESS	10.7 bar g
DESIGN TEMP	200°C
INSTALLED POWER	11 KW

ITEM	115-E-101	
SERVICE	REGENERATION GAS TRIM COOLER	
TYPE	DOUBLE PIPE	
DUTY/SURFACE	0.066 MW/68 m^2	
	SHELL	TUBE
DESIGN PRESS	11.5 bar g	15.0 bar g
DESIGN TEMP	185°C	85°C
INSULATION	N	N

ITEM	115-D-103
SERVICE	REGENERATION K.O. DRUM
IDxTL-TL	750mm x 2300mm
DESIGN PRESS	9.1/F.V. barg
DESIGN TEMP	185°C
INSULATION	NO

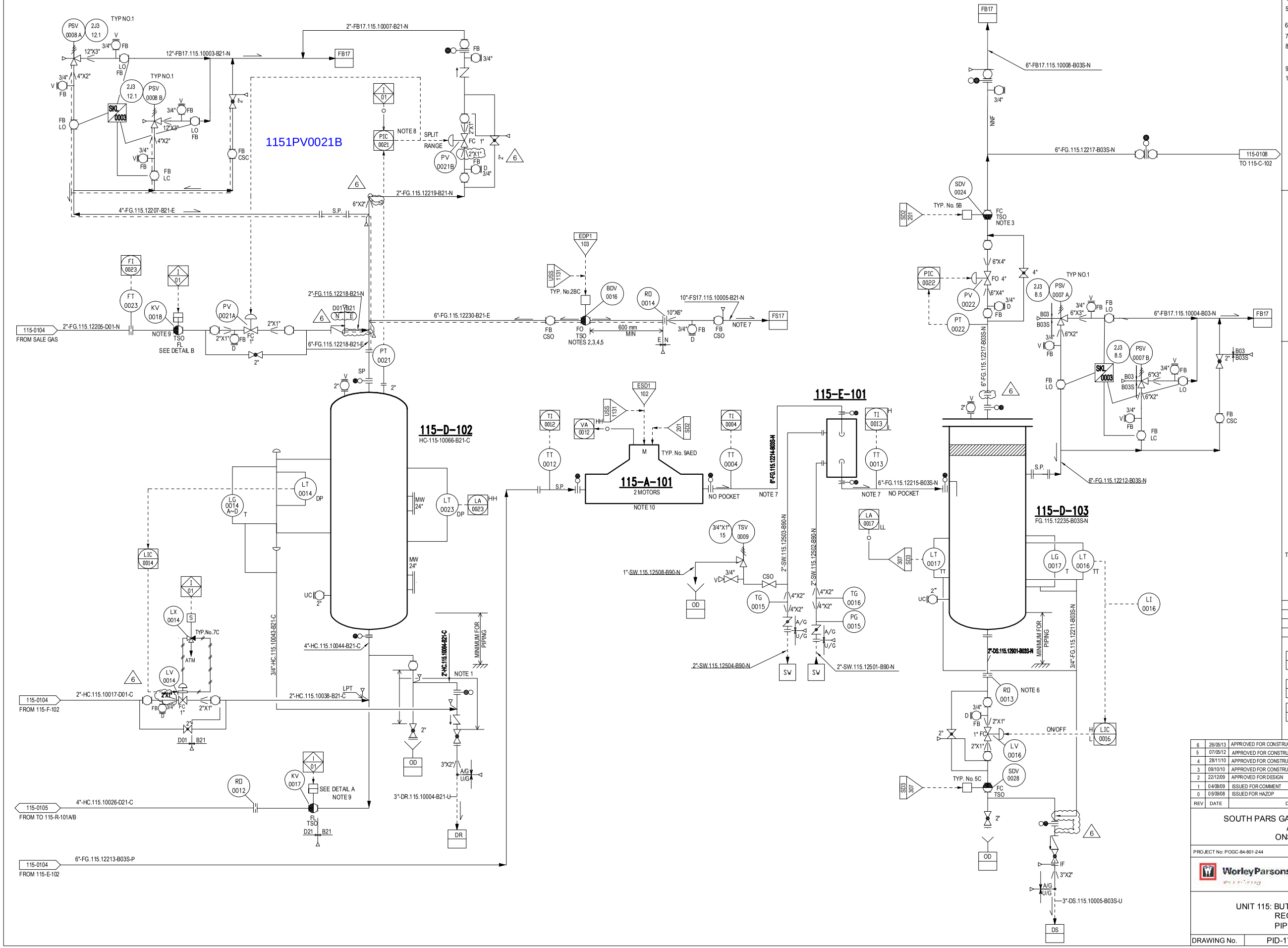

NOTES

1- PRESENCE OF LPG. POSSIBILITY OF FREEZING VALVES IN CASE OF MISOPERATION MINIMUM DISTANCE BETWEEN TWO VALVES SHALL BE 600 mm.
2- VALVE EQUIPPED WITH AIR RESERVE.
3- FIRE RESISTANT VALVE (ALL INSTRUMENTS, BOX PROTECTION, TUBING, CABLES,...ETC, WILL BE SELECTED AND CLASSIFIED ACCORDING TO THIS PROTECTION).
4- VALVE LOCATED AT HIGH POINT.
5- AIR RESERVE TO BE SIZED TO BE ABLE TO COMMAND FOR 3 STROKES VALVE OPERATING DURING AIR INSTRUMENT FAILURE.
6- FOR SAFETY REASON.
7- TWO PHASES FLOW LINE, NEED FOR REINFORCED ANCHORING.
8- PIC HAS TWO SET POINTS: ONE FOR DRAINING PHASE AND ONE FOR FILLING PHASE.
9- RISING STEM BALL VALVE.
10- NUMBER OF AIR COOLER BAYS IS 1.

GENERAL NOTES

ALL INSTRUMENT TAGS TO READ:

LETTERS	NUMBER
1141 FFF	NNNN

HOLDS

1- DELETED.
2- DELETED.
3 DELETED.

DETAIL A (ON/OFF VALVE)

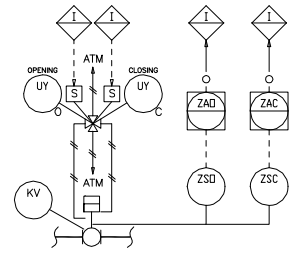

DETAIL B (RAMP OPENING VALVE)

A RAMP SHALL BE INSTALLED ON THE AIR CIRCUIT FOR OPENING POSITION. (CLOSED TO OPEN POSITION IN 2 MINUTES APPROXIMATELY)

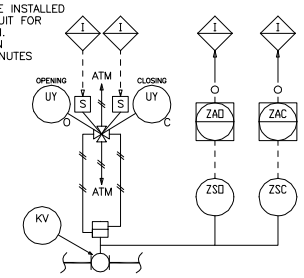

THIS P&ID IS BASED ON DRAWING NO. 115-5PD-7/8 SUPPLIED BY AXENS.

DRUM	EXCHANGER	AIR COOLER	
115-D-102	115-E-101	115-A-101	
115-D-103			

UTILITY PID NUMBER

FB17	PID-1718-186-0040-0004	FS17	PID-1718-186-0040-0004
SW	PID-1718-186-0040-0003	DS	PID-1718-186-0040-0005
DR	PID-1718-186-0040-0005		

REV	DATE	DESCRIPTION	ORIGI	PRPD	CHKD	APP'D	AUTHD
6	26/05/13	APPROVED FOR CONSTRUCTION	OIEC	SD	SM	SM	RM
5	07/05/12	APPROVED FOR CONSTRUCTION	OIEC	SM	MHM	SM	RM
4	28/11/10	APPROVED FOR CONSTRUCTION	OIEC	SM	MA	MMF	AAP
3	09/10/10	APPROVED FOR CONSTRUCTION	OIEC	SM	MA	MMF	AAP
2	22/12/09	APPROVED FOR DESIGN	OIEC	SM	MA	MMF	AAP
1	04/08/09	ISSUED FOR COMMENT	OIEC	SM	MA	MMF	AAP
0	05/09/08	ISSUED FOR HAZOP	WP	SH	AI	RPW	RC

SOUTH PARS GAS FIELD DEVELOPMENT PHASES 17&18
ASSALUYEH-IRAN
ONSHORE FACILITIES

POGC

PROJECT No: POGC-84-801-244 | DOC. CLASS 1 | SCALE: N/A

WorleyParsons | IDRO | OIEC | IOEC

UNIT 115: BUTANE TREATMENT AND DRYING
REGENERATION COOLING SECTION
PIPING AND INSTRUMENT DIAGRAM

DRAWING No. PID-1718-115-0030-0107 | REVISION 6

THIS DOCUMENT IS THE SOLE PROPERTY OF N.I.O.C. ALL INFORMATION CONTAINED HEREIN MAY NEITHER BE REPRODUCED USED, DISCLOSED, TRANSMITTED OR IN ANY WAY MADE PUBLIC WITHOUT THE WRITTEN PERMISSION OF THE OWNER