ITEM	115-C-101
SERVICE	C4 EXTRACTOR
IDxTL-TL (mm x mm)	1700X18700
DESIGN PRESS	24.0/FV barg
DESIGN TEMP	85°C
INSULATION	YES

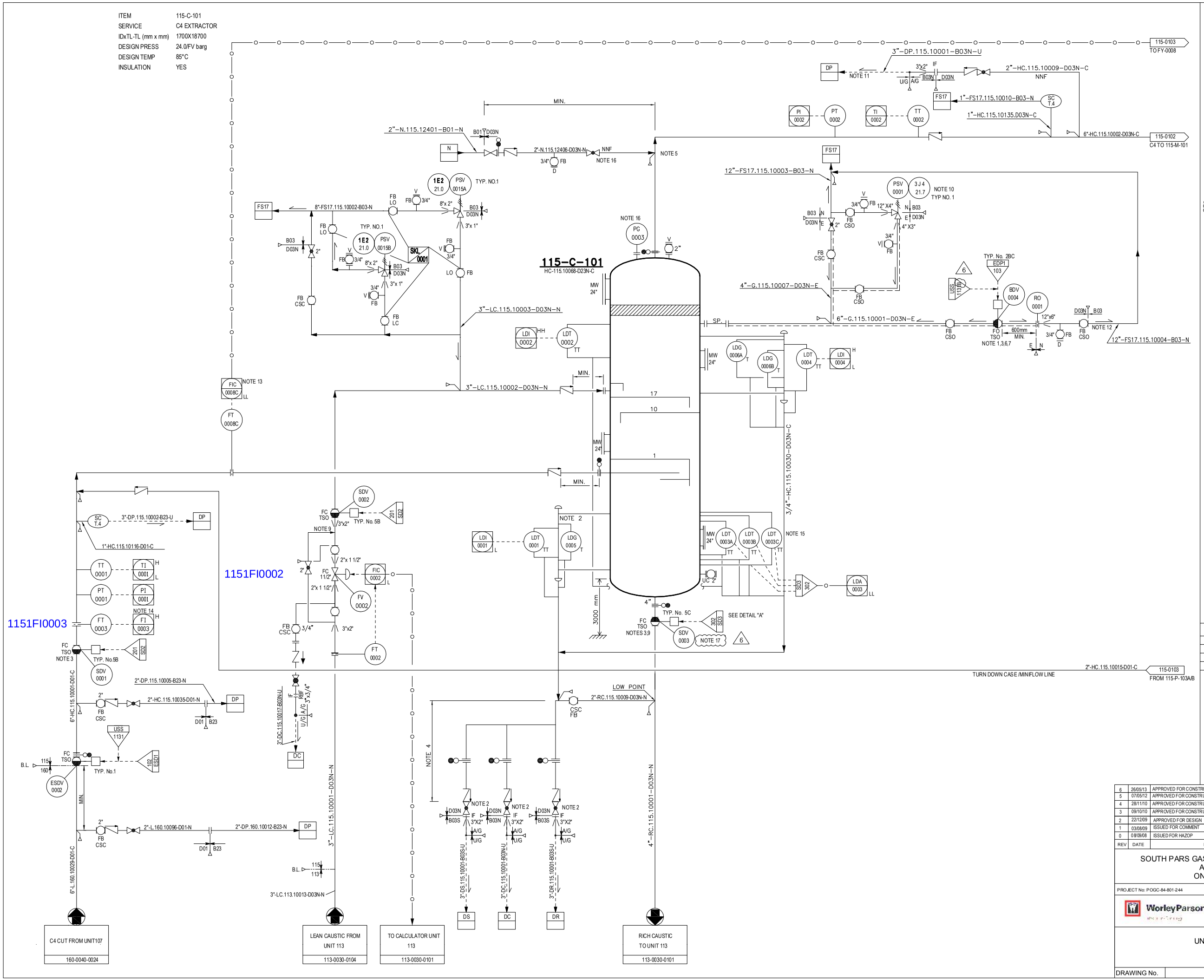

NOTES

1 - VALVE EQUIPPED WITH AIR RESERVE.
2 - LDG ON 115-C-101 READABLE FROM SPENT CAUSTIC DRAINAGE VALVE FACILITIES.
3 - FIRE RESISTANT VALVE (ALL INSTRUMENTS, BOX PROTECTION, TUBING, CABLES, ETC., WILL BE SELECTED AND CLASSIFIED ACCORDING TO THIS PROTECTION).
4 - PRESENCE OF LPG. POSSIBILITY OF FREEZING VALVES IN CASE OF MISOPERATION. MINMUM DISTANCE BETWEEN 2 VALVES SHALL BE 600 mm.
5 - CONNECTION ON TOP OF THE LINE.
6 - VALVE LOCATED AT HIGH POINT.
7 - AIR RESERVE TO BE SIZED TO BE ABLE TO COMMAND FOR 3 STROKES VALVE OPERATING DURING AIR INSTRUMENT FAILURE.
8 - DELETED.
9 - ISOLATION VALVE TO BE LOCATED AT MINIMUM DISTANCE FROM 115-C-101.
10- SPARE RELIEF VALVE STORED IN WAREHOUSE.
11- LINE USED FOR DRAINING NON CONDENSABLE GASES.
12- TWO PHASES FLOW LINE NEED FOR REINFORCED ANCHORING.
13- IN CASE OF LOW FLOW ALARM, OPERATOR TO START 115-P-103.
14- IN CASE OF HIGH FLOW ALARM, OPERATOR TO STOP 115-P-103.
15- PROVIDE 2 OUT OF 3 VOTING SYSTEM.
16- PG 0003 TO BE READABLE FROM GLOBE VALVE.
17- LAHH-0004 A/B/C IN UNIT 113 INITATE CLOSURE OF SDV-0003.

GENERAL NOTES

ALL INSTRUMENT TAGS TO READ:
LETTERS NUMBER
1151 FFFF NNNN

HOLDS

1 - DELETED.
2 - DELETED.

DETAIL

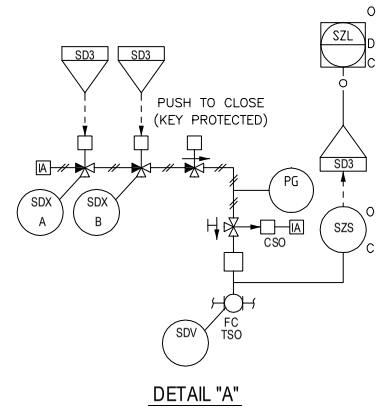

DETAIL "A"

THIS P&ID IS BASED ON DRAWING NO. 115-5PD-1/8 SUPPLIED BY AXENS.

EQUIPMENT LIST

COLUMN			
115-C-101			

UTILITY PID NUMBER

FS17	PID-1718-186-0040-0004	DR	PID-1718-186-0040-0005
DC	PID-1718-186-0040-0005	DP	PID-1718-186-0040-0005
DS	PID-1718-186-0040-0005		
N	PID-1718-186-0040-0002		

REV	DATE	DESCRIPTION	ORIGI	PRPD	CHKD	APP'D	AUTH'D
6	26/05/13	APPROVED FOR CONSTRUCTION	OIEC	SD	SM	SM	RM
5	07/05/12	APPROVED FOR CONSTRUCTION	OIEC	SM	MHM	SM	RM
4	28/11/10	APPROVED FOR CONSTRUCTION	OIEC	SM	MA	MMF	AAP
3	09/10/10	APPROVED FOR CONSTRUCTION	OIEC	SM	MA	MMF	AAP
2	22/12/09	APPROVED FOR DESIGN	OIEC	SM	MA	MMF	AAP
1	03/08/09	ISSUED FOR COMMENT	OIEC	SM	MA	MMF	AAP
0	08/09/08	ISSUED FOR HAZOP	WP	SH	AI	RPW	RC

SOUTH PARS GAS FIELD DEVELOPMENT PHASES 17&18
ASSALUYEH-IRAN
ONSHORE FACILITIES

POGC

PROJECT No: POGC-84-801-244 | DOC. CLASS 1 | SCALE: N/A

WorleyParsons | IDRO | OIEC | IOEC

UNIT 115: BUTANE TREATMENT AND DRYING
C4 EXTRACTOR
PIPING AND INSTRUMENT DIAGRAM

DRAWING No. PID-1718-115-0030-0101 | REVISION 6